CODE EVALUATION REPORT

CERus-1012

PUBLISHED: July 2022
REVISED: October 2026
EXPIRATION: October 2029

PRODUCT: **ALLURA® and TERRAPLANK™ FIBER-CEMENT SIDING**

REPORT HOLDER: Plycem USA, LLC

CONTACT DETAILS:
396 W. Greens Road, Suite 300
Houston, TX
77067 USA
www.allurausa.com

CSI DIVISION: 07 00 00 – Thermal and Moisture Protection

CSI SECTION: 07 46 46 – Fiber-Cement Siding

APPLICABLE CODES:
2024, 2021, 2018, 2015 International Building Code (IBC)
2024, 2021, 2018, 2015 International Residential Code (IRC)
2023 Florida Building Code (FBC)
2023 Florida Residential Code (FRC)
2025, 2022 California Building Code (CBC)
2025 California Wildland-Urban Interface Code (CWUIC)
2024, 2021 International Wildland-Urban Interface Code (IWUIC)
2025, 2022 California Green Building Standards Code (CALGreen), Title 24 Part 11
2025, 2020, 2015 ICC 700 *National Green Building Standard*™ (ICC 700)

EVALUATED:
Physical Properties
Surface-Burning Characteristics
Wind Resistance
Fire-Resistance Ratings

IAS ACCREDITED Product Certification Agency PCA-118

1.0 APPROVED FOR FOLLOWING:

APPROVED TYPES OF CONSTRUCTION:	Types I-V/AB
APPROVED USE:	Exterior Cladding and Interior Wall and Ceiling Finish (Dry Room).
APPROVED INSTALLATIONS:	• Exterior cladding on bearing and non-load bearing exterior walls. • Interior walls and ceilings.

2.0 DESCRIPTION:

2.1 General:

Allura® and TerraPlank™ products are Type A Grade II fiber-cement products complying with Section 1403.9 of the 2024 IBC, Section 1403.10 of the 2021 / 2018 IBC and Section 1404.10 of the 2015 IBC as well as 2024 / 2021 / 2018 / 2015 IRC Section R703.10 for use as exterior siding. Allura® and TerraPlank™ are available in various shapes and sizes as outlined in Table 1 of this report. Allura® and TerraPlank™ fiber-cement are available in a wide variety of color and texture options applied over the fiber-cement product.

When used in exterior cladding applications Allura® and TerraPlank™ fiber-cement are intended for installation over structural sheathing materials listed in Section 2304.6 of the 2024 / 2021 / 2018 / 2015 IBC or Section R604 of the 2024 / 2021 / 2018 / 2015 IRC or non-structural sheathing as outlined in 2024 / 2021 / 2018 / 2015 IRC Section R703.15.1. Installation shall include a water-resistive barrier complying with Section 1402.2 of the 2024 / 2021 / 2018 IBC and Section 1403.2 of the 2015 IBC or R703.2 of the 2024 / 2021 / 2018 / 2015 IRC as appropriate.

Allura® and TerraPlank™ fiber-cement products have a flame spread index of 0 and a smoke developed index of ≤ 5 when evaluated in accordance with ASTM E84.

Allura® and TerraPlank™ fiber-cement products are classified non-combustible when evaluated in accordance with ASTM E136 and comply for use in Types I-V construction, including use in fire-resistance rated applications. See sections 4.3 and 4.4 of this report respectively for details.

Allura® and TerraPlank™ fiber-cement products are available in Allura® and TerraPlank™ Lap Siding, Allura® and TerraPlank™ Panel, Allura® and TerraPlank™ Shake, and Allura® Shake Select designations in dimensions as outlined in Table 1 of this report.

Table 1 – Allura® and TerraPlank™ Fiber-Cement Products

TYPE	MODEL	WIDTH		LENGTH		THICKNESS	
		inches	mm	inches	mm	inches	mm
ALLURA® AND TERRAPLANK™ LAP SIDING	Traditional Cedar	5¼,6¼,7¼,8¼,9¼,12	133, 159, 184, 210, 235, 305	144	3658	5/16	8
	Smooth	5¼,6¼,7¼,8¼,9¼,12	133, 159, 184, 210, 235, 305				
ALLURA® AND TERRAPLANK™ PANEL SIDING	Stucco	48	1219	96 108 120 144	2438 2743 3048 3658	5/16	8
	Cedar 8'' Groove	48	1219				
	Traditional Cedar	16, 48	406, 1219				
	Smooth	16, 48	406, 1219				
ALLURA® AND TERRAPLANK™ SHAKE SIDING	Straight Edge	16	406	48	1219	¼	6
	Staggered Edge	16	406	48	1219	¼	6
	Half Rounds – 6 Tab	16	406	48	1219	¼	6
	Half Rounds – 8 Tab	16	406	48	1219	¼	6
	Octagon	16	406	48	1219	¼	6
ALLURA® SHAKE SELECT	Random Square Straight Edge	12, 16	305, 406	48	1219	5/16	8
	Random Square Staggered Edge	16	406	48	1219	5/16	8
	Half Rounds	16	406	48	1219	5/16	8
	Octagon	16	406	48	1219	5/16	8

Allura® and TerraPlank™ fiber-cement cladding products comply with the 2023 FBC Section 1404.10 and 2023 FRC Section 703.10 *fiber-cement siding* conforming to ASTM C1186 as Type A Grade II fiber cement excluding use in areas defined as high-velocity hurricane zones (HVHZ) applications. See Section 10.1 of this report for additional details.

Allura® and TerraPlank™ siding products as detailed in Sections 2.0 through 9.0 of this report comply with the 2025 / 2022 CBC Section 1403.9 and 2025 / 2022 CRC Section 703.10 fiber-cement siding conforming to ASTM C1186 as Type A Grade II fiber cement. Installation is to be in accordance with the applicable building codes and this report. See Section 10.2 of this report for further details.

Where used in areas identified by the state as a Fire Hazard Severity Zone or any Wildland-Urban Interface (WUI) designated by the enforcing agency, Allura® and TerraPlank™ siding products as detailed in Sections 2.0 through 9.0 of this report are approved for use in exterior design and construction in accordance with Section 503.2.1 and 504.5 of the 2025 CWUIC as *Noncombustible Material*. See Section 10.3 of this report for further details.

Allura® and TerraPlank™ siding products as detailed in Sections 2.0 through 9.0 of this report comply with the requirements of the 2024 / 2021 IWUIC Sections 503.2 *Noncombustible Material item*, 504.5 *Exterior Walls*, and 505.5 *Exterior Walls* when installed in accordance with this report. Installation is to comply with this report and requirements of the 2024 / 2021 IWUIC based on Ignition Class required. See Section 10.4 of this report for further details.

Allura® fiber-cement products with Spectrum®, comply with the 2022 CALGreen and 2020 ICC 700 as *prefinished materials*, requiring no additional site-applied finishings. See Section 10.5 and 10.6 of this report for further details.

3.0 DESIGN:

Allura® and TerraPlank™ fiber-cement are exterior cladding products for installation over code complying wall framing, and sheathing including an approved water-resistive barrier. Use of Allura® or TerraPlank™ does not require professional design but shall be in applications where wind-resistance requirements determined in accordance with the applicable code are within the limits as outlined in Section 8.1 of this report for installations described.

4.0 INSTALLATIONS:

4.1 General:

Installation of Allura® and TerraPlank™ fiber-cement products must comply with the manufacturer's published installation instructions, this report, and the applicable code(s). Where differences are found between documents, this report and the applicable building code shall be followed.

Installation of Allura® and TerraPlank™ fiber-cement products shall be over exterior walls including the code prescribed water-resistive barrier and sheathing products in accordance with Sections 1404.1 through 1404.4 of the 2024 / 2021 / 2018 IBC, Section 1404.17 of the 2024 IBC, Section 1404.16 of the 2021 / 2018 IBC, Sections 1405.1 through 1405.3 and Sections 1404.10 of the 2015 IBC, and Sections R703.1 and R703.3 of the 2024 / 2021 / 2018 / 2015 IRC. Allura® and TerraPlank™ fiber-cement Lap Siding and Panel products can be installed over laterally braced single-wall construction or double-wall construction with sheathing of structural or non-structural designation, where the wall is constructed in accordance with the applicable code. Allura® fiber-cement Shake and Shake Select products require installation over a min. $\frac{7}{16}$-inch (11 mm) thickness oriented strandboard (OSB) or ½-inch (13 mm) thickness plywood Exposure 1 classification wood sheathing types. Fasteners for attachment of Allura® and TerraPlank™ fiber-cement products must be corrosion-resistance, hot-dipped galvanized, or stainless steel. Clearance between Allura® and TerraPlank™ fiber-cement siding products and earth on the exterior of a building shall be ≥ 6-inches (152 mm). Clearance between Allura® and TerraPlank™ fiber-cement siding products and horizontal concrete slabs or similar surfaces exposed to weather shall be ≥ 1-inch (25 mm) unless under a sheltered hardscape.

Where field cuts are required, all field-cut edges are to be painted or sealed. Paint is not required to be applied to the backside of Allura® and TerraPlank™ fiber-cement products.

Installation of Allura® and TerraPlank™ fiber-cement assemblies shall conform to Tables 2-5 and Figures 3-9 of this report for the respecitve product type.

4.1.1 Special Inspection:

2024 / 2021 IBC Section 1705.12: Special inspection including periodic special inspection for wind resistance are required for buildings constructed in the following areas:

1. Wind Exposure Category B, where V is ≥ 150 mph (241 km/hr).
2. Wind Exposure Category C or D, where V is ≥ 140 mph (225 km/hr).

Special inspection is to confirm installation is in conformance with Section 8.1 of this report. Installation in areas of maximum V (basic design wind speed) of 130 mph (209 km/hr), maximum mean roof height of 40 ft (12.2 m) and Exposure Category B do not require special inspection.

4.2 New Construction:

4.2.1 Allura® and TerraPlank™ Lap Siding

Allura® and TerraPlank™ Lap Siding can be installed in a face or blind fastened assembly, as detailed in Section 9.1 of this report and in accordance with Table 2 of this report. Installation is restricted to horizontal orientation.

Vertical joints between boards must occur over studs, unless otherwise noted in Table 2 of this report. Maintain a min. ⅛-inch (3 mm) clearance when siding meets a vertical termination, such as windows, doors, trim, corners, and penetrations. Caulk all vertical terminations or transitions unless siding terminates into a pocket or "J" channel receiver, or trim is installed over the siding. Maintain a ¼-inch (6 mm) clearance when Allura® or TerraPlank™ Lap Siding meets horizontal flashing, such as window and door heads, band boards, water tables etc. Caulking is not to be applied between the siding and the horizontal flashing.

See Section 9.1 for details of Allura® and TerraPlank™ Lap Siding installation.

4.2.2 Allura® TerraPlank™ Panel Siding

Allura® and TerraPlank™ Panels are installed in an exposed fastener (face fastened) application and in accordance with Table 3 of this report. Installation can be in vertical or horizontal orientation (16-inch (406 mm) width panels are intended for vertical installation only) where panels horizontal and vertical joints are treated as outlined below.

All edges of Allura® and TerraPlank™ Panels shall be backed by framing or solid blocking for attachment unless otherwise noted in Table 3 of this report. Fasteners are to be installed a min. 2-inches (51 mm) from panel corners in each direction with a min. ⅜-inch (9 mm) edge distance. Vertical edges shall be lightly butted and centered on framing members (unless otherwise noted in Table 3) and sealed with caulking, covered with battens, or designed to meet 2024 / 2021 / 2018 IBC Section 1404.2, 2015 IBC Section 1403.2 and IRC Section R703.1 Horizontal joints are to include "Z" flashing, between panels leaving a ¼-inch (6 mm) gap. Maintain a min. ⅛-inch (3 mm) clearance when siding meets a vertical termination, such as windows, doors, trim, corners, penetrations, etc. Caulk all vertical terminations or transitions unless siding terminates into a pocket or "J" channel receiver, or trim is installed over the siding. Maintain a ¼-inch (6 mm) clearance when Allura® or TerraPlank™ Panel meets horizontal flashing, such as window and door heads, band boards, water tables etc. Caulking is not to be applied between the siding and the horizontal flashing.

4.2.3 Allura® and TerraPlank™ Shake Siding and Allura® Shake Select Siding

Allura® and TerraPlank™ Shake Siding and Allura® Shake Select Siding are installed in a hidden fastener (blind nailed) application as detailed in Section 9.3 of this report and in accordance with Table 4 and 5 of this report.

Maintain a min. ⅛-inch (3 mm) clearance when siding meets a vertical termination, such as windows, doors, trim, corners, penetrations, etc. Caulk all vertical terminations or transitions unless siding terminates into a pocket or "J" channel receiver, or trim is installed over the siding. Maintain a ¼-inch (6 mm) clearance when Allura® or TerraPlank™ Shake Siding or Allura®

Shake Select Siding meets horizontal flashing, such as window and door heads, band boards, water tables etc. Caulking is not to be applied between the siding and the horizontal flashing.

See Section 9.3 for details of Allura® and TerraPlank™ Shake and Allura® Shake Select installation.

4.3 Fire-Resistance Rated Construction

Allura® and TerraPlank™ exterior claddings, as detailed, are approved for use where a limited (restricted) load-bearing fire-resistance rated construction is required for up to 1-hour, with the fire-resistance rating applied for interior or exterior of wall fire exposure. Assembly details can be found in Section 8.2 and Table 6 of this report.

4.4 Types I-IV Construction

Allura® and TerraPlank™ exterior claddings are classified non-combustible and can be used as exterior cladding in Types I-IV construction when installed in accordance with this report with the following limitations:

4.4.1 Any Combustible Water-Resistive Barriers

Allura® and TerraPlank™ fiber-cement exterior cladding is approved for use as exterior cladding in Types I-IV construction when installed with a combustible water-resistive barrier where the building is limited to ≤ 40 ft (12.2 m) measured from grade.

Where Allura® or TerraPlank™ fiber-cement products are used on exterior walls of Types I-IV construction > 40 ft (12.2 m) height above grade with combustible water-resistive barriers, the intended exterior wall assembly shall be listed by an approved agency as complying with the requirements of NFPA 285. The listed assembly is to outline approval for use of non-combustible fiber-cement products complying as Type A Grade II per ASTM C1186 of min. $^{5}/_{16}$-inch (8 mm) thickness. Allura® and TerraPlank™ installation shall be in accordance with the approved agency's listing installation requirements for siding type and Table 6 of this report.

4.4.2 Restricted Combustible Water-Resistive Barriers

Allura® and TerraPlank™ fiber-cement exterior cladding is approved for use as exterior cladding in Types I-IV construction when installed with a combustible water resistive barrier in buildings > 40 ft (12.2 m) height where the water resistive barrier is the only combustible component meeting the following criteria:

1. The water-resistive barrier has a flame spread of ≤ 25 and smoke developed index of ≤ 450 when evaluated in accordance with ASTM E84 or UL 723, and
2. The water-resistive barrier meets the following criteria when evaluated to ASTM E1354 at the intended installed thickness tested in the horizontal orientation with an applied heat flux of 50 kW/m^2:
    a. Peak heat release rate of ≤ 150 kW/m^2
    b. Total heat release of ≤ 20 MJ/m^2
    c. Effective heat of combustion of ≤ 17 MJ/kg

5.0 LIMITATIONS

- Allura® and TerraPlank™ fiber-cement products are to be installed in accordance with the manufacturer's installation instructions, the applicable code(s) and this report. Where differences exist between documents, the applicable code(s) and this report shall be followed.
- Where Allura® and TerraPlank™ fiber-cement products are used in fire-resistance rated construction, installation is to be in accordance with Sections 4.3 of this report, with load restricted to 35% of Load Resistance Factor Design (LRFD) design load determined per the National Design Specification for Wood Construction (NDS). Where Allura® and TerraPlank™ fiber-cement products are used in Types I-IV construction, installation is to be in accordance with Section 4 of this report and the applicable code.
- Allura® and TerraPlank™ fiber-cement products require installation with corrosion-resistant fasteners, use of electro-galvanized corrosion treatment type is not recommended.
- Allura® and TerraPlank™ fiber-cement products are evaluated for use as exterior cladding and interior finish (dry room) applications. Use of Allura™ fiber-cement products in alternate applications is outside the scope of this report.
- Allura® and TerraPlank™ fiber-cement products are manufactured in White City, OR, Roaring River, NC, Bogota, Colombia, Cali, Colombia, Santa Clara, Mexico and Nuevo Laredo, Mexico with inspections by QAI Laboratories.

6.0 SUPPORTING INFORMATION:

The following data has been submitted for evaluation of Allura® and TerraPlank™ fiber-cement products:

- Data outlining compliance for surface burning characteristics evaluated to ASTM E84.
- Data outlining compliance with ASTM C1186 as Type A Grade II fiber-cement material.
- Data evaluating Allura® assemblies for transverse load resistance in accordance with ASTM E330.
- Data evaluating wind speed resistance in accordance with ASCE 7-22.
- Data evaluating fire-resistance in accordance with ASTM E119.
- Data evaluating non-combustibility in accordance with ASTM E136.

7.0 MARKING:

Examples of Alllura™ fiber-cement panels finished product labels are outlined in Figures 1 and 2 below.

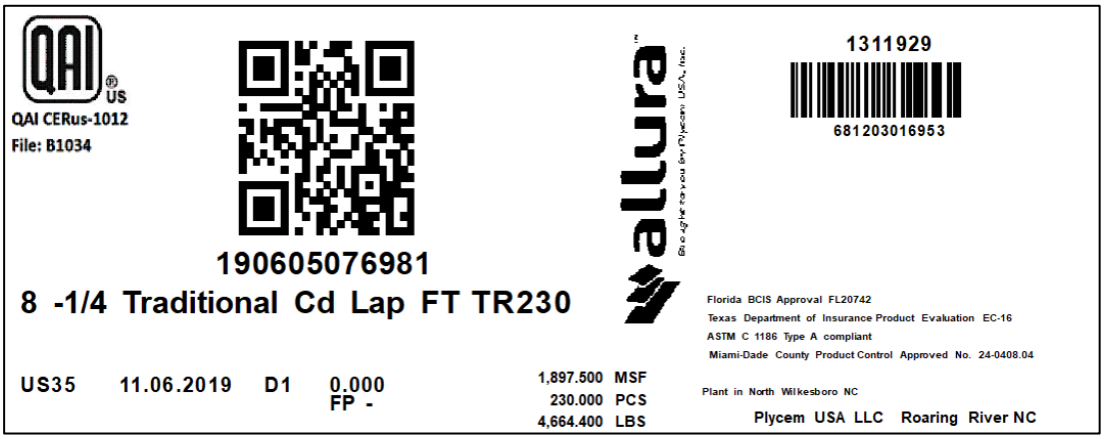

Figure 1 – Allura® Finished Product Label Including CER$_{US}$-1012 and QAI Certification Mark (USA)



Figure 2 – Allura® Finished Product Label Including CER$_{US}$-1012 and QAI Certification Mark (Mexico)

TerraPlank™ labeling is consistent with labeling for Allura® fiber-cement products shown in Figures 1 and 2.

8.0 RESULTS / RATINGS:

8.1 Allowable Load Capacities

Table 2 – Allura® and TerraPlank™ Lap Siding Installations Wind Speeds and Design Pressures[1]

	Fastening Method[2]	Product Width (in.)	Fastener Type[3]	Attachment	Wall Details[4,10,12]	Framing Spacing (in.)	Building Height[9] (ft.)	V_{asd}[5,8,11] Wind Exposure Category[7] B	C	D	V[6,11] Wind Exposure Category[7] B	C	D	Allowable Design Load (psf)
1	Face	12	Collated siding nail, min. 2" (51 mm) length	8" (203 mm) into sheathing and studs	Dimensional lumber framing including min. 7/16" (11 mm) structural wood sheathing	16	0-15	136	111	101	175	143	130	-36.1
							20	130	108	99	168	139	127	
							40	119	100	93	154	130	120	
							60	112	96	90	145	124	116	
2	Face	9-¼	Collated siding nail, min. 2" (51 mm) length	16" (406 mm) into each stud	Dimensional lumber framing, sheathing optional[10]	16	0-15	112	92	83	144	118	107	-24.5
							20	107	89	81	138	115	105	
							40	98	83	76	127	107	99	
							60	93	79	74	120	103	95	
3	Face	9-¼	Collated siding nail, min. 2" (51 mm) length	8" (203 mm) into sheathing and studs	Dimensional lumber framing including min. 7/16" (11 mm) structural wood sheathing	16	0-15	158	129	117	204	167	151	-48.7
							20	151	125	115	195	162	148	
							40	138	117	108	179	151	139	
							60	131	112	104	169	145	134	
4	Face	9-¼	Collated siding nail, min. 2" (51 mm) length	12" (305 mm) into sheathing and studs	Dimensional lumber framing including min. 7/16" (11 mm) structural wood sheathing	24	0-15	114	93	84	147	120	109	-25.3
							20	109	90	82	141	117	106	
							40	100	84	78	129	109	100	
							60	94	81	75	121	104	97	
5	Blind	9 ¼	Ring-shank siding nail, min. 1-½" (38 mm) length	8" (203 mm) into sheathing and studs	Dimensional lumber framing including min. 7/16" (11 mm) structural wood sheathing	16	0-15	139	114	103	179	147	133	-37.8
							20	133	111	101	172	143	130	
							40	122	103	95	157	133	123	
							60	115	99	92	149	127	118	
6	Blind	9-¼	11-gauge ring shank roofing nail, min. 1-¾" (45 mm) length	8" (203 mm) into sheathing and studs	Dimensional lumber framing including min. 7/16" (11 mm) structural wood sheathing	24	0-15	130	106	97	168	137	125	-33.1
							20	125	103	94	161	133	122	
							40	114	96	89	147	124	115	
							60	108	92	86	139	119	111	
7	Blind	9 ¼	11-gauge ring shank roofing nail, min. 1" (25 mm) length	16" (406 mm) into furring strips	Dimensional lumber framing including min. ½" (13 mm) gypsum sheathing and nom. 1x3 wood furring strips	16	0-15	117	96	87	151	123	112	-26.7
							20	112	93	85	144	120	109	
							40	102	86	80	132	112	103	
							60	97	83	77	125	107	99	
8	Blind	9-¼	11-gauge smooth shank roofing nail min. 1-¼" (32 mm) length	12" (305 mm) into furring strips	1x4 furring strips at 12" (305 mm) vertical spacing, anchored into underlying sheathing	24	0-15	104	85	77	134	110	100	-21.2
							20	100	83	76	129	107	97	
							40	91	77	71	118	99	92	
							60	86	74	-	111	95	-	
9	Blind	9-¼	11-gauge smooth shank roofing nail min. 1-¼" (32 mm) length	8" (203 mm) into furring strips	1x4 furring strips at 8" (203 mm) vertical spacing, anchored into underlying sheathing	24	0-15	141	116	105	182	149	135	-39.0
							20	135	112	102	175	145	132	
							40	124	104	96	160	135	124	
							60	117	100	93	151	129	120	

Table 2 Continued – Allura® and TerraPlank™ Lap Siding Installations Wind Speeds and Design Pressures[1]

								V_{asd}[5,8,11] Wind Exposure Category[7]			V[6,11] Wind Exposure Category[7]			
	Fastening Method[2]	Product Width (in.)	Fastener Type[3]	Attachment	Wall Details[4,10,12,13]	Framing Spacing (in.)	Building Height[9] (ft.)	B	C	D	B	C	D	Allowable Design Load (psf)[14]
10	Blind	9 ¼	No. 8 self-tapping wafer-head screw, min 1-¼“ (32 mm) length	16" (406 mm) into each stud[15]	20-gauge steel, sheathing optional[10]	16	0-15	122	100	91	158	129	118	-29.4
							20	117	97	89	152	126	115	
							40	107	91	84	139	117	108	
							60	102	87	81	131	112	104	
11	Face	8-¼	Collated siding nail, min. 2” (51 mm) length	16" (406 mm) into each stud	Dimensional lumber framing, sheathing optional[10]	16	0-15	115	94	85	148	121	110	-25.8
							20	110	91	83	142	118	108	
							40	101	85	78	130	110	101	
							60	95	81	76	123	105	98	
12	Face	≤ 8-¼	Collated siding nail, min. 2” (51 mm) length	8" (203 mm) into sheathing and studs	Dimensional lumber framing including min. 7/16” (11 mm) structural wood sheathing	16	0-15	158	129	117	204	167	151	-48.7
							20	151	125	115	195	162	148	
							40	138	117	108	179	151	139	
							60	131	112	104	169	145	134	
13	Face	≤ 8-¼	Collated siding nail, min. 2” (51 mm) length	12" (305 mm) into sheathing and studs	Dimensional lumber framing including min. 7/16” (11 mm) structural wood sheathing	24	0-15	114	93	84	147	120	109	-25.3
							20	109	90	82	141	117	106	
							40	100	84	78	129	109	100	
							60	94	81	75	121	104	97	
14	Face	≤ 8-¼	Ring shank siding nail, min. 1-½” (38 mm) length	8" (203 mm) into sheathing	Dimensional lumber framing including min. 7/16” (11 mm) structural wood sheathing	24	0-15	154	126	115	199	163	148	-46.7
							20	148	123	112	191	159	145	
							40	135	114	106	175	148	136	
							60	128	110	102	165	142	131	
15	Blind	≤ 8-¼	Ring shank siding nail, min. 2" (51 mm) length	16" (406 mm) into each stud	Dimensional lumber framing, sheathing optional[10]	16	0-15	101	83	75	130	107	97	-20.0
							20	97	80	73	125	104	95	
							40	89	75	-	114	97	-	
							60	84	72	-	108	93	-	
16	Blind	8-¼	11-gauge smooth shank roofing nail, min. 1-¾” (45 mm) length	16" (406 mm) into each stud	Dimensional lumber framing, sheathing optional[10]	16	0-15	109	89	81	141	115	105	-23.3
							20	105	87	79	135	112	102	
							40	96	81	75	124	104	96	
							60	90	77	72	117	100	93	
17	Blind	≤ 8-¼	Ring shank siding nail, min. 1-½” (38 mm) length	8” (203 mm) into sheathing and studs	Dimensional lumber framing including min. 7/16” (11 mm) structural wood sheathing	16	0-15	139	114	103	179	147	133	-37.8
							20	133	111	101	172	143	130	
							40	122	103	95	157	133	123	
							60	115	99	92	149	127	118	
18	Blind	≤ 8-¼	11-gauge ring shank roofing nail, min. 1-¾” (45 mm) length	12" (305 mm) into sheathing and studs	Dimensional lumber framing including min. 7/16” (11 mm) structural wood sheathing	24	0-15	119	98	89	154	126	115	-27.9
							20	114	95	87	148	123	112	
							40	105	88	82	135	114	105	
							60	99	85	79	128	109	102	

Table 2 Continued – Allura® and TerraPlank™ Lap Siding Installations Wind Speeds and Design Pressures[1]

	Fastening Method[2]	Product Width (in.)	Fastener Type[3]	Attachment	Wall Details[4,10,12]	Framing Spacing (in.)	Building Height[9] (ft.)	V_{asd}[5,8,11] Wind Exposure Category[7]			V[6,11] Wind Exposure Category[7]			Allowable Design Load (psf)[14]
								B	C	D	B	C	D	
19	Blind	≤ 8-¼	11-gauge smooth shank roofing nail, min. 1-¾" (45 mm) length	8" (203 mm) into sheathing and studs	Dimensional lumber framing including min. 7/16" (11 mm) structural wood sheathing	24	0-15	143	117	107	185	152	138	-40.3
							20	138	114	104	178	147	135	
							40	126	106	98	163	137	127	
							60	119	102	95	153	132	122	
20	Blind	≤ 8-¼	11-gauge ring shank roofing nail, min. 1-¼" (32 mm) length	8" (203 mm) into sheathing	Dimensional lumber framing including min. 7/16" (11 mm) structural wood sheathing	24	0-15	167	136	124	215	176	160	-54.4
							20	160	133	121	206	171	156	
							40	146	123	114	189	159	147	
							60	138	118	110	178	153	142	
21	Blind	≤ 8-¼	11-gauge ring shank roofing nail min. 2" (51 mm) length	8" (203 mm) into sheathing	Dimensional lumber framing, including 1" (25 mm) Owens Corning® EZSheath™	24	0-15	125	102	93	161	132	120	-30.6
							20	120	99	91	155	128	117	
							40	110	93	85	142	119	110	
							60	84	72	-	109	93	-	
22	Blind	≤ 8-¼	11-gauge ring shank roofing nail, min. 1" (25 mm) length	16" (406 mm) into furring strips	Dimensional lumber framing including min. ½" (13 mm) gypsum sheathing and nom. 1x3 wood furring strips	16	0-15	117	96	87	151	123	112	-26.7
							20	112	93	85	144	120	109	
							40	102	86	80	132	112	103	
							60	97	83	77	125	107	99	
23	Blind	≤ 8-¼	11-gauge smooth shank roofing nail min. 1-¼" (32 mm) length	12" (305 mm) into furring strips	1x4 furring strips at 12" (305 mm) vertical spacing, anchored into underlying sheathing	24	0-15	104	85	77	134	110	100	-21.2
							20	100	83	76	129	107	97	
							40	91	77	71	118	99	92	
							60	86	74	-	111	95	-	
24	Blind	≤ 8-¼	11-gauge smooth shank roofing nail min. 1-¼" (32 mm) length	8" (203 mm) into furring strips	1x4 furring strips at 8" (203 mm) vertical spacing, anchored into underlying sheathing	24	0-15	141	116	105	182	149	135	-39.0
							20	135	112	102	175	145	132	
							40	124	104	96	160	135	124	
							60	117	100	93	151	129	120	
25	Blind	≤ 8-¼	No. 8 self-tapping wafer-head screw, min 1-¼" (32 mm) length	16" (406 mm) into each stud[15]	20-gauge steel, sheathing optional[10]	16	0-15	122	100	91	158	129	118	-29.4
							20	117	97	89	152	126	115	
							40	107	91	84	139	117	108	
							60	102	87	81	131	112	104	
26	Face	7-¼	Collated siding nail, min. 2" (51 mm) length	16" (406 mm) into each stud	Dimensional lumber framing, sheathing optional[10]	16	0-15	130	107	97	168	138	125	-33.2
							20	125	104	95	161	134	122	
							40	114	96	89	147	124	115	
							60	108	92	86	139	119	111	
27	Face	≤ 7-¼	Collated siding nail, min. 2" (51 mm) length	8" (203 mm) into sheathing and studs	Dimensional lumber framing including min. 7/16" (11 mm) structural wood sheathing	16	0-15	183	150	136	236	194	176	-65.7
							20	176	146	133	227	188	172	
							40	161	136	125	207	175	162	
							60	152	130	121	196	168	156	

Table 2 Continued – Allura® and TerraPlank™ Lap Siding Installations Wind Speeds and Design Pressures[1]

	Fastening Method[2]	Product Width (in.)	Fastener Type[3]	Attachment	Wall Details[4,10,12,13]	Framing Spacing (in.)	Building Height[9] (ft.)	V_{asd}[5,8,11] Wind Exposure Category[7] B	C	D	V[6,11] Wind Exposure Category[7] B	C	D	Allowable Design Load (psf)[14]
28	Blind	7-¼	11-gauge smooth shank roofing nail, min. 1-¾" (45 mm) length	16" (406 mm) into each stud	Dimensional lumber framing, sheathing optional[10]	16	0-15	127	104	94	163	134	122	-31.4
							20	121	101	92	157	130	119	
							40	111	94	87	143	121	112	
							60	105	90	83	135	116	108	
29	Face	6–¼	Collated siding nail, min. 2" (51 mm) length	16" (406 mm) into each stud	Dimensional lumber framing, sheathing optional[10]	16	0-15	133	109	99	172	141	128	-34.8
							20	128	106	97	165	137	125	
							40	117	99	91	151	127	118	
							60	110	95	88	143	122	113	
30	Blind	6-¼	11-gauge smooth shank roofing nail, min. 1-¾" (45 mm) length	16" (406 mm) into each stud	Dimensional lumber framing, sheathing optional[10]	16	0-15	136	112	101	176	144	131	-36.4
							20	131	108	99	169	140	128	
							40	120	101	93	154	130	120	
							60	113	97	90	146	125	116	
31	Face	5-¼	Collated siding nail, min. 2" (51 mm) length	16" (406 mm) into each stud	Dimensional lumber framing, sheathing optional[10]	16	0-15	149	122	111	193	158	143	-43.7
							20	143	119	108	185	153	140	
							40	131	111	102	169	143	132	
							60	124	106	99	160	137	127	
32	Blind	5-¼	11-gauge smooth shank roofing nail, min. 1-¾" (45 mm) length	16" (406 mm) into each stud	Dimensional lumber framing, sheathing optional[10]	16	0-15	140	114	104	180	148	134	-38.3
							20	134	111	102	173	144	131	
							40	123	103	96	158	134	123	
							60	116	99	92	149	128	119	

1. Installation must be in accordance with the manufacturer's installation instructions.
2. For blind fastening method refer to Figure 3. For face fastening method refer to Figure 4.
3. Fasteners used must be corrosion resistant.
4. Unless otherwise noted, wood framing/furring species must have a specific gravity of 0.42 or greater. Furring attachment to structural wood sheathing and wood and steel framing must be determined by the project design engineer to resist the maximum wind speeds.
5. V_{asd} = Allowable stress design wind speed (mph).
6. V = Basic design wind speed (mph) per ASCE 7-22 or 2024 IBC Figures 1609.3(1) through 1609.3(4).
7. Wind speed coefficients design assumption per ASCE 7-22: K_{zt} = 1, K_d = 0.85, GC_{pi} = 0.18, GC_p = -1.4
8. 2024 IBC Section 1609.3.1 Eq. 16-18 $V_{asd} = V\ (0.6)^{0.5}$
9. Building height is the mean roof height (ft) of a building, except that eave height shall be used for roof angle less than or equal to 10° (2-12 roof slope)
10. Where non-structural sheathing types are included, increase the length of fasteners by the sheathing thickness to maintain min. fastener penetration into framing.
11. Wind speed values have been determined in accordance with ASCE 7-22.
12. Framing anchoring, and attachment of sheathing to underlying framing is to be in accordance with the applicable code and sufficient to resist service loads.
13. Unless otherwise specified, steel studs are to be minimum 33 ksi yield, G60 galvanized in accordance with the applicable code.
14. Allowable design pressures are determined for worst case negative pressure loading. Where no sheathing is installed, allowable positive pressures are limited to equivalent negative pressures noted.
15. Fastener length can be adjusted to penetrate underlying steel framing a minimum 1/4-inch or three (3) full treads.

Table 3 – Allura® and TerraPlank™ Panel Siding Installations, Wind Speeds and Design Pressures[1]

								V_{asd}[5,8,11] Wind Exposure Category[7]			V[6,11] Wind Exposure Category[7]			
	Fastening Method	**Product Width (in.)**	**Fastener Type[3]**	**Attachment[2]**	**Wall Details[4,10,12,13]**	**Framing Spacing (in.)**	**Building Height[9] (ft.)**	B	C	D	B	C	D	**Allowable Design Load (psf)[14]**
33	Face	48	Collated siding nail, min. 2" (51 mm) length	6" (152 mm) around perimeter, 12" (305 mm) in the field into framing	Dimensional lumber framing, sheathing optional[10]	16	0-15	104	85	77	134	110	100	-21.1
							20	100	83	75	129	107	97	
							40	91	77	71	118	99	92	
							60	86	74	-	111	95	-	
34	Face	48	Ring-shank siding nail, min. 1-½" (38 mm) length	6" (152 mm) vertically into framing	Dimensional lumber framing, sheathing optional[10]	16	0-15	118	97	88	152	125	113	-27.2
							20	113	94	86	146	121	111	
							40	103	87	81	134	113	104	
							60	98	84	78	126	108	100	
35	Face	48	No. 8 wafer-head screws, min. 1-⅝" (41 mm) length	6" (152mm) vertically into framing	Dimensional lumber framing, sheathing optional[10]	16	0-15	140	114	104	180	148	134	-38.3
							20	134	111	102	173	144	131	
							40	123	103	96	158	134	123	
							60	116	99	92	150	128	119	
36	Face	48	Collated siding nail, min. 2" (51 mm) length	6" (152 mm) around perimeter, 6" (152 mm) in the field into framing	Dimensional lumber framing, sheathing optional[10]	16	0-15	147	120	109	189	155	141	-42.2
							20	141	117	107	182	151	138	
							40	129	109	100	166	140	129	
							60	122	104	97	157	135	125	
37	Face	48	Collated siding nail, min. 2" (51 mm) length	6" (152 mm) around perimeter, 12" (305 mm) in the field into framing[16]	Dimensional lumber framing including min. 7/16" (11 mm) structural wood sheathing	24	0-15	98	80	73	126	103	94	-18.7
							20	94	78	71	121	100	92	
							40	86	72	-	111	93	-	
							60	81	-	-	104	-	-	
38	Face	48	No. 8 wafer-head screws, min. 1-⅝" (41 mm) length	6" (152 mm) vertically, and 16" (405 mm) horizontally into sheathing	Dimensional lumber framing including min. $\frac{7}{16}$" (11 mm) structural wood sheathing	24	0-15	149	122	111	192	157	143	-43.3
							20	143	118	108	184	153	139	
							40	130	110	102	168	142	131	
							60	123	106	98	159	136	127	
39	Face	48	SFS TW-2-D12 screws, min. 1-½" (38 mm) length	Manufacturer's Commercial Pattern "A" into sheathing	Dimensional lumber framing including min. $\frac{7}{16}$" (11 mm) structural wood sheathing	24	0-15	126	103	94	163	133	121	-31.1
							20	121	100	92	156	129	118	
							40	111	93	86	143	120	111	
							60	104	89	83	135	116	107	
40	Face	48	SFS TW-2-D12 screws, min. 1-½" (38 mm) length	Manufacturer's Commercial Pattern "B" into sheathing	Dimensional lumber framing including min. $\frac{7}{16}$" (11 mm) structural wood sheathing	24	0-15	105	86	78	136	111	101	-21.7
							20	101	84	76	130	108	99	
							40	92	78	72	119	100	93	
							60	87	75	-	112	96	-	
41	Face	48	No.10 bugle-head screw, min. 1" (25 mm) length	Manufacturer's "3-4-10" Pattern into sheathing	Dimensional lumber framing including min. 7/16" (11 mm) structural wood sheathing	24	0-15	134	109	99	173	141	128	-35.0
							20	128	106	97	165	137	125	
							40	117	99	91	151	128	118	
							60	111	95	88	143	123	114	

Table 3 Continued – Allura® and TerraPlank™ Panel Siding Installations, Wind Speeds and Design Pressures[1]

								V_{asd}[5,8,11] Wind Exposure Category[7]			V[6,11] Wind Exposure Category[7]			
	Fastening Method[2]	Product Width (in.)	Fastener Type[3]	Attachment	Wall Details[4,10,12,13]	Framing Spacing (in.)	Building Height[9] (ft.)	B	C	D	B	C	D	Allowable Design Load (psf)[14]
42	Face	48	Aerosmith VersaPin LH 2635SBG pin, min. 2-½" (64 mm) length	8" (203 mm) vertically and horizontally into sheathing[16]	Dimensional lumber with 1" (25 mm) Owens Corning EZSheath™	24	0-15	129	106	96	167	137	124	-32.8
							20	124	103	94	160	133	121	
							40	114	96	88	147	124	114	
							60	107	92	85	138	119	110	
43	Face	48	No. 10 bugle-head screw, min. 1" (25 mm) length)	8" (203 mm) vertically into furring	Dimensional lumber framing including 1/2" (13 mm) gypsum sheathing and 1x3 wood furring strips	16	0-15	146	119	109	188	154	140	-41.7
							20	140	116	106	181	150	137	
							40	128	108	100	165	139	129	
							60	121	104	96	156	134	124	
44	Face	48	No.8 wafer-head screws, min. 1-⅝" (41 mm) length	8" (203 mm) vertically and 16" (406 mm) horizontally into furring	Dimensional lumber framing including min. 7/16" (11 mm) structural wood sheathing with 1x3 PT furring strips at 16" (405 mm) horizontally	24	0-15	146	119	109	188	154	140	-41.7
							20	140	116	106	181	150	137	
							40	128	108	100	165	139	129	
							60	121	104	96	156	134	124	
45	Face	48	No. 8 self-tapping wafer-head screws, min. 1-⅝" (41 mm) length	6" (152mm) vertically into framing[13,15]	20-gauge steel, sheathing optional[10]	16	0-15	134	109	99	173	141	128	-35.0
							20	128	106	97	165	137	125	
							40	117	99	91	151	128	118	
							60	111	95	88	143	123	114	
46	Face	48	No. 8 self-tapping wafer-head screws, min. 1-⅝" (41 mm) length	6" (152 mm) around perimeter, 12" (305 mm) in the field into framing[13,15]	20-gauge steel, ½" (13 mm) gypsum or wood-based sheathing	16	0-15	147	120	109	190	156	141	-42.4
							20	141	117	107	182	151	138	
							40	129	109	101	167	141	130	
							60	122	104	97	157	135	125	
47	Face	48	No. 8 self-tapping wafer-head screws, min. . 1-⅝" (41 mm) length	6" (152 mm) around perimeter, 12" (305 mm) in the field into framing[13,15,16]	20-gauge steel, ½" (13 mm) gypsum or wood-based sheathing	24	0-15	111	91	82	143	117	107	-24.1
							20	106	88	81	137	114	104	
							40	97	82	76	126	106	98	
							60	92	79	73	119	102	94	

1. Installation must be in accordance with the manufacturer's installation instructions.
2. For Commercial Pattern A see Figure 5. For Commercial Pattern B see Figure 6. For 3-4-10 Pattern see Figure 7.
3. Fasteners used must be corrosion resistant.
4. Unless otherwise noted, wood framing/furring species must have a specific gravity of 0.42 or greater. Furring attachment to structural wood sheathing and wood and steel framing must be determined by the project design engineer to resist the maximum wind speeds.
5. V_{asd} = Allowable stress design wind speed (mph).
6. V = Basic design wind speed (mph) per ASCE 7-22 or 2024 IBC Figures 1609.3(1) through 1609.3(4).
7. Wind speed coefficients design assumption per ASCE 7-22: K_{zt} = 1, K_d = 0.85, GC_{pi} = 0.18, GC_p = -1.4
8. 2024 IBC Section 1609.3.1 Eq. 16-18 $V_{asd} = V\ (0.6)^{0.5}$
9. Building height is the mean roof height (ft) of a building, except that eave height shall be used for roof angle less than or equal to 10° (2-12 roof slope)
10. Where non-structural sheathing types are included, increase the length of fasteners by the sheathing thickness to maintain min. fastener penetration into framing.
11. Wind speed values have been determined in accordance with ASCE 7-22.
12. Framing anchoring, and attachment of sheathing to underlying framing is to be in accordance with the applicable code and sufficient to resist service loads.
13. Unless otherwise specified, steel studs are to be minimum 33 ksi yield, G60 galvanized in accordance with the applicable code.
14. Allowable design pressures are determined for worst case negative pressure loading. Where no sheathing is installed, allowable positive pressures are limited to equivalent negative pressures noted.
15. Fastener length can be adjusted to penetrate underlying steel framing a minimum 1/4-inch or three (3) full treads.
16. Assembly is not intended for use with 16-inch (406 mm) width panel siding.

Table 4 – Allura® and TerraPlank™ Shake Siding Installations and Design Pressures[1]

								V_{asd}[5,8,11] Wind Exposure Category[7]			V[6,11] Wind Exposure Category[7]			
	Fastening Method[2]	**Product Width (in.)**	**Fastener Type[3]**	**Attachment[2]**	**Wall Details[4,10,12,13]**	**Framing Spacing (in.)**	**Building Height[9] (ft.)**	B	C	D	B	C	D	**Allowable Design Load (psf)[14]**
48	Blind	48" Shake	Collated ring shank siding nail, min. 2" (51 mm) length	One fastener at every keyway into sheathing	Dimensional lumber framing including min. 7/16" (11 mm) structural wood sheathing	24	0-15	157	129	117	203	166	151	-48.3
							20	151	125	114	194	161	147	
							40	138	116	107	178	150	139	
							60	130	112	104	168	144	134	

1. Installation must be in accordance with the manufacturer's installation instructions.
2. See Figures 8 and 9.
3. Fasteners used must be corrosion resistant.
4. Unless otherwise noted, wood framing/furring species must have a specific gravity of 0.42 or greater. Furring attachment to structural wood sheathing and wood and steel framing must be determined by the project design engineer to resist the maximum wind speeds.
5. V_{asd} = Allowable stress design wind speed (mph).
6. V = Basic design wind speed (mph) per ASCE 7-22 or 2024 IBC Figures 1609.3(1) through 1609.3(4).
7. Wind speed coefficients design assumption per ASCE 7-22: K_{zt} = 1, K_d = 0.85, GC_{pi} = 0.18, GC_p = -1.4
8. 2024 IBC Section 1609.3.1 Eq. 16-18 $V_{asd} = V\,(0.6)^{0.5}$
9. Building height is the mean roof height (ft) of a building, except that eave height shall be used for roof angle less than or equal to 10° (2-12 roof slope)
10. Where non-structural sheathing types are included, increase the length of fasteners by the sheathing thickness to maintain min. fastener penetration into framing.
11. Wind speed values have been determined in accordance with ASCE 7-22.
12. Framing anchoring, and attachment of sheathing to underlying framing is to be in accordance with the applicable code and sufficient to resist service loads.
13. Unless otherwise specified, steel studs are to be minimum 33 ksi yield, G60 galvanized in accordance with the applicable code.
14. Allowable design pressures are determined for worst case negative pressure loading. Where no sheathing is installed, allowable positive pressures are limited to equivalent negative pressures noted.
15. Fastener length can be adjusted to penetrate underlying steel framing a minimum 1/4-inch or three (3) full treads.

Table 5 – Allura® Shake Select Siding Installations and Design Pressures[1]

	Fastening Method	Product Width (in.)	Fastener Type[3]	Attachment[2]	Wall Details[4,10,12,13]	Framing Spacing (in.)	Building Height[9] (ft.)	V_{asd}[5,8,11] Wind Exposure Category[7]			V[5,11] Wind Exposure Category[7]			Allowable Design Load (psf)[14]
								B	C	D	B	C	D	
49	Blind	48" Select Shake	Collated siding nail, min. 1-¾" (45 mm) length	Fastener installed at edge of panel and every other (every second) keyway through sheathing	Dimensional lumber framing including min. 7/16" (11 mm) structural wood sheathing	24	0-15	153	125	114	198	162	147	-46.0
							20	147	122	111	190	157	144	
							40	134	113	105	174	146	135	
							60	127	109	101	164	140	130	
50	Blind	48" Select Shake	11-gauge roofing nail, min. 1-¾" (45 mm) length.	Fastener installed at edge of panel and every other (every second) keyway through sheathing	Dimensional lumber framing including min. 7/16" (11 mm) structural wood sheathing	24	0-15	131	107	98	169	139	126	-33.7
							20	126	104	95	162	135	123	
							40	115	97	90	149	125	116	
							60	109	93	86	140	120	112	
51	Blind	48" Select Shake	No. 9 cement board screw, min. 1-⅝" (41 mm) length	Fastener installed at edge of panel and every other (every second) keyway through sheathing[15]	20-gauge steel with min. 7/16" (11 mm) structural wood sheathing	24	0-15	184	151	137	238	195	177	-66.7
							20	177	147	134	228	189	173	
							40	162	137	126	209	176	163	
							60	153	131	122	197	169	157	

1. Installation must be in accordance with the manufacturer's installation instructions.
2. See Figure 10
3. Fasteners used must be corrosion resistant.
4. Unless otherwise noted, wood framing/furring species must have a specific gravity of 0.42 or greater. Furring attachment to structural wood sheathing and wood and steel framing must be determined by the project design engineer to resist the maximum wind speeds.
5. V_{asd} = Allowable stress design wind speed (mph).
6. V = Basic design wind speed (mph) per ASCE 7-22 or 2024 IBC Figures 1609.3(1) through 1609.3(4).
7. Wind speed coefficients design assumption per ASCE 7-22: K_{zt} = 1, K_d = 0.85, GC_{pi} = 0.18, GC_p = -1.4
8. 2024 IBC Section 1609.3.1 Eq. 16-18 $V_{asd} = V\ (0.6)^{0.5}$
9. Building height is the mean roof height (ft) of a building, except that eave height shall be used for roof angle less than or equal to 10° (2-12 roof slope)
10. Where non-structural sheathing types are included, increase the length of fasteners by the sheathing thickness to maintain min. fastener penetration into framing.
11. Wind speed values have been determined in accordance with ASCE 7-22.
12. Framing anchoring, and attachment of sheathing to underlying framing is to be in accordance with the applicable code and sufficient to resist service loads.
13. Unless otherwise specified, steel studs are to be minimum 33 ksi yield, G60 galvanized in accordance with the applicable code.
14. Allowable design pressures are determined for worst case negative pressure loading. Where no sheathing is installed, allowable positive pressures are limited to equivalent negative pressures noted.
15. Fastener length can be adjusted to penetrate underlying steel framing a minimum 1/4-inch or three (3) full threads.

8.2 Fire-Resistance Rated Assemblies

Table 6 – Allura® and TerraPlank™ Fiber-Cement Products Fire Rated Assembly

COMPONENT		DESCRIPTION	
Interior Finish	Type:	1 layer of Type X gypsum board compliant with ASTM C1396, listed by approved agency.	
	Min. Thickness:	⅝ in. (16 mm).	
	Installation:	Gypsum to be installed with min. #6 1-⅝-inches (41 mm) length Type W drywall screws spaced at maximum 8-inches (203 mm) around the perimeter and 12-inches (305 mm) in the field. Gypsum joints are to be taped and mudded in accordance with ASTM C474 and ASTM C475, and screw heads are to be covered with joint compound.	
Wall Framing[1]	Type:	Dimensional Lumber	
	Min. Size:	Nominal 2 x 4 (38 mm x 89 mm).	
	Installation:	16-inches (406 mm) on center spacing. Wall studs are to be loaded to maximum 35% of determined adjusted compression design value parallel to grain determined based on Load and Resistance Factor Design (LRFD) per the National Design Specification (NDS). Wall studs are to be connected to the Top and Sill plates described in accordance with the applicable code.	
Top Plates	Min. double 2 x 4 (38 mm x 89 mm) dimensional lumber header, with joints of lumber offset. Lumber to be fastened in accordance with the applicable code.		
Sill Plates	Min. single 2 x 4 (38 mm x 89 mm) dimensional lumber sill, with joints of lumber offset. Lumber to be fastened in accordance with the applicable code.		
Insulation	Type:	Mineral Wool Batt	Fiberglass Batt
	Type:	16'' (406 mm) width	16'' (406 mm) width R13
	Installation	Friction fit between studs ensuring no through gaps at joint and stud locations.	Friction fit between studs ensuring no through gaps at joint and stud locations.
Water Resistive Barrier	Type:	As specified in Section 4.4.1 and 4.4.2 of this report.	
Exterior Sheathing	Type:	1 layer of Type X gypsum board compliant with ASTM C1396 or exterior gypsum compliant to ASTM C1177, listed by approved agency.	
	Min. Thickness:	⅝ in. (16 mm).	
	Installation:	Gypsum to be installed with min. #6 1-⅝-inches (41 mm) length Type W drywall screws spaced at maximum 8-inches (203 mm) around the perimeter and 12-inches (305 mm) in the field. Joint treatment is not optional but not required.	
Exterior Cladding	Type:	Allura® and TerraPlank™ fiber-cement Lap Siding or Panel Products	
	Min. Thickness:	$\frac{5}{16}$ inches (8 mm).	
	Installation:	Lap Siding: 1-¼-inches (32 mm) overlap installed with min. 1-¾-inch (44 mm) roofing nail installed blind or face nail at each stud location. Panel Siding: Panels: 1-¾-inch (44 mm) roofing nail installed face nail at 8-inches (203 mm) on center around the perimeter, and 12-inches (305 mm) in the field.	
Fire-Resistance Rating		1-Hour	

1. Where used in load-bearing fire-resistance rated applications, maximum applied load is restricted to 35% Load and Resistance Factor Design (LRFD) adjusted design load determined in accordance with the NDS.

9.0 INSTALLATION DETAILS

9.1 Allura® and Terraplank™ Lap Siding Installation

9.1 Allura® and Terraplank™ Lap Siding Installation

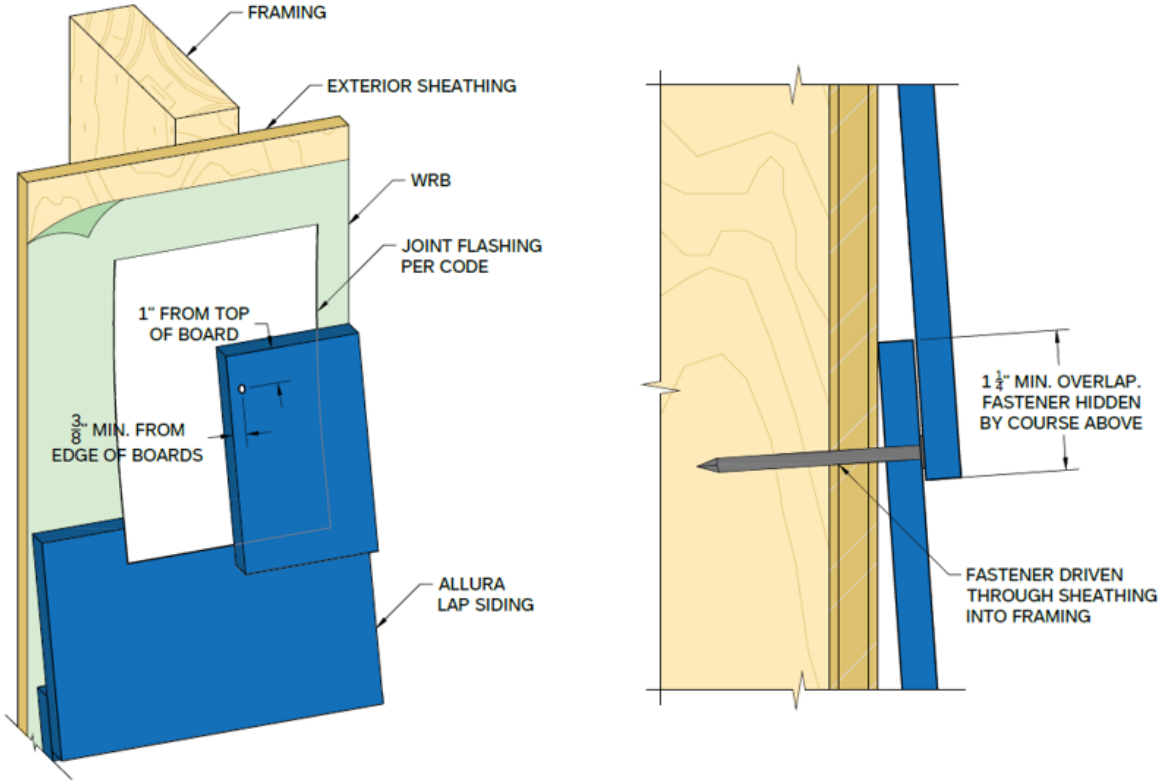

Figure 3 – Allura® and TerraPlank™ Lap Siding Blind Nail Fastening Details

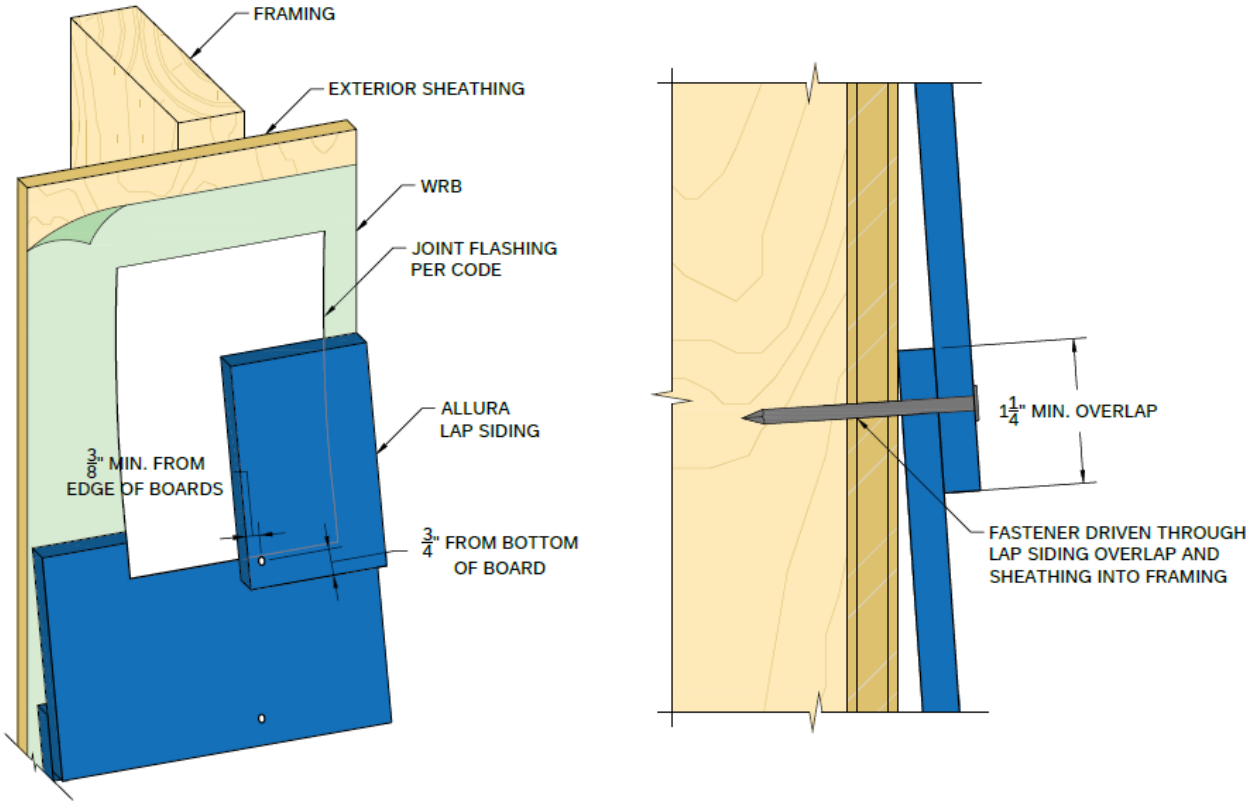

Figure 4 – Allura® and TerraPlank™ Lap Siding Face Nail Fastening Details

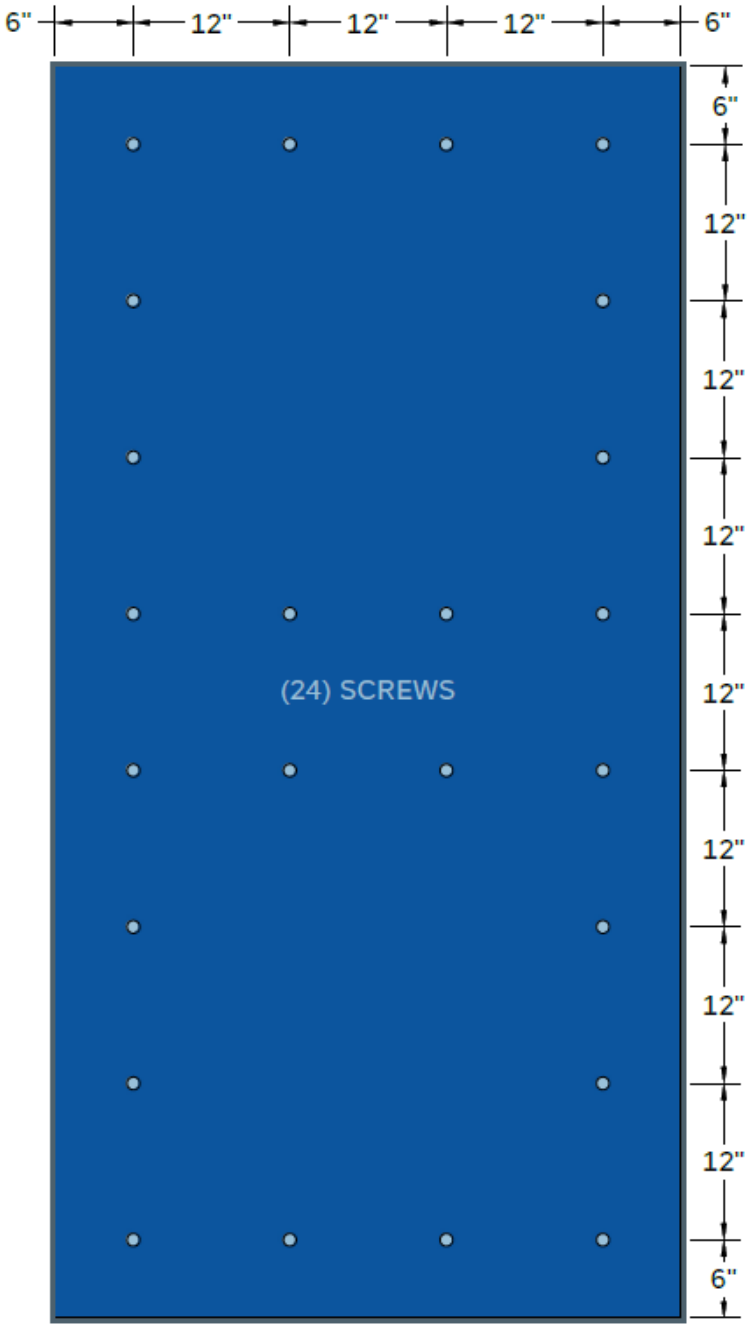

Figure 5 - Allura® and TerraPlank™ Panel Commercial Pattern "A"

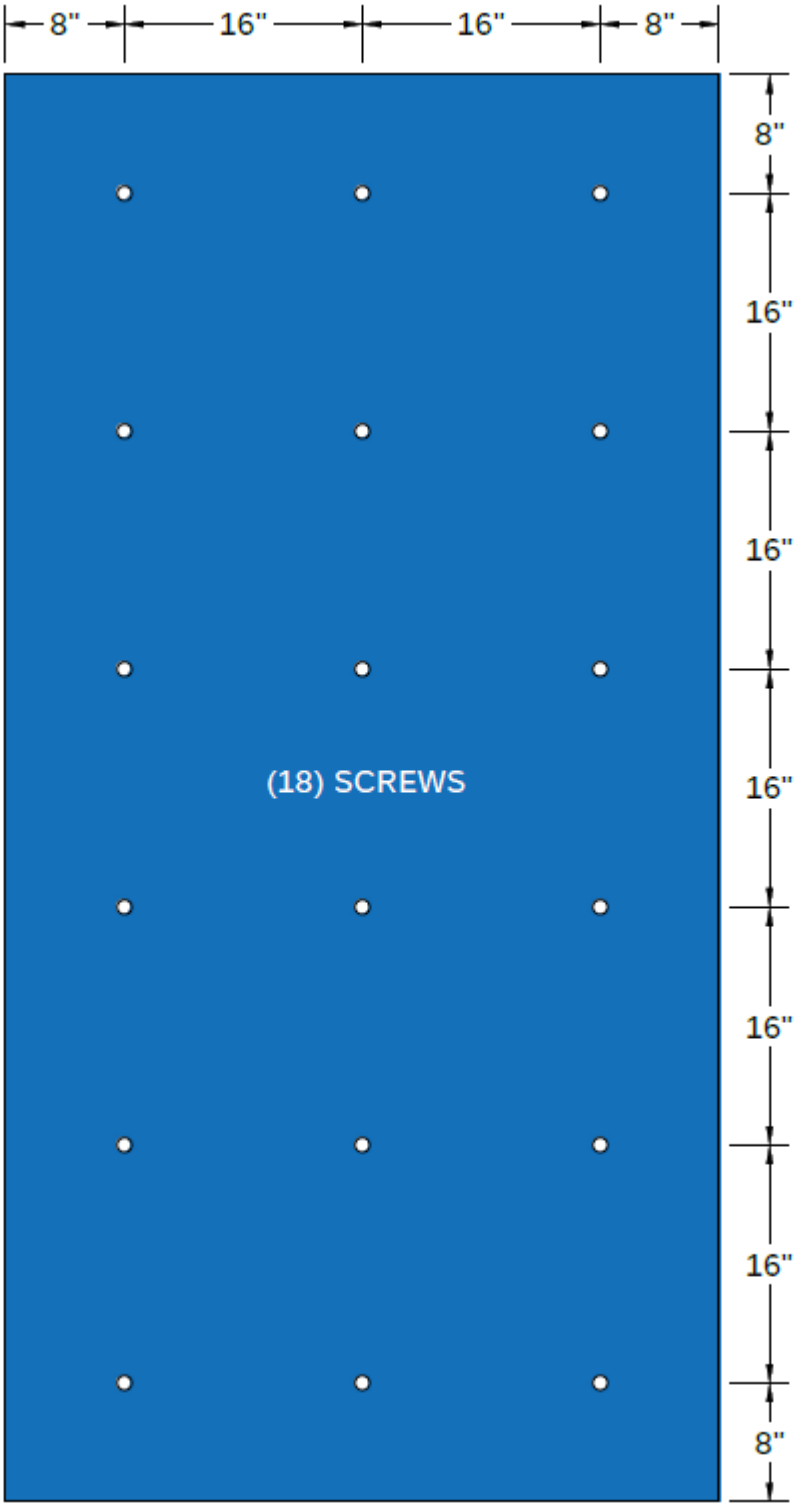

Figure 6 - Allura® and TerraPlank™ Panel Commercial Pattern "B"

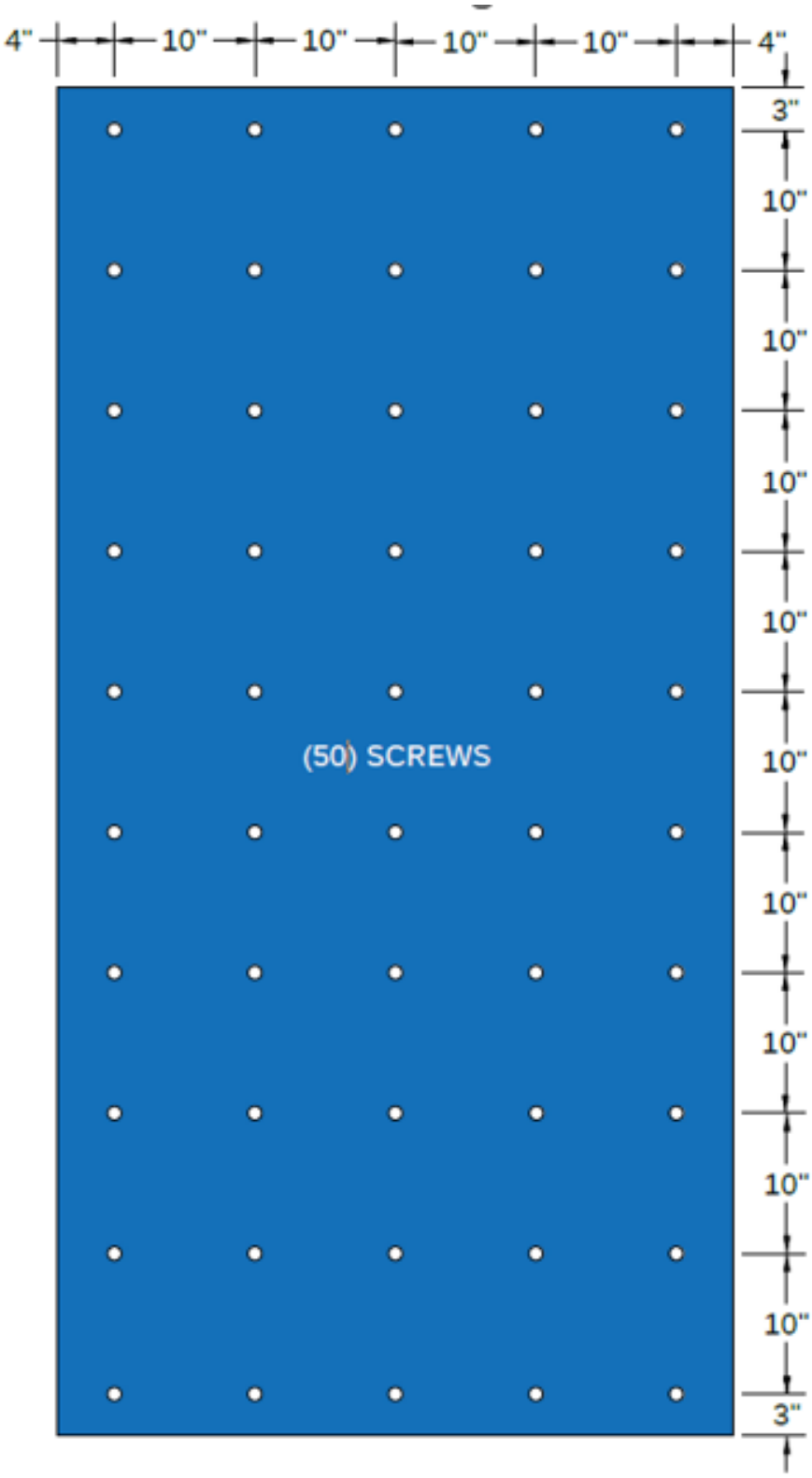

Figure 7: Allura® and TerraPlank™ Panel 3-4-10 Pattern

9.3 Allura® And Terraplank™ Shake and Allura® Shake Select Siding Installation

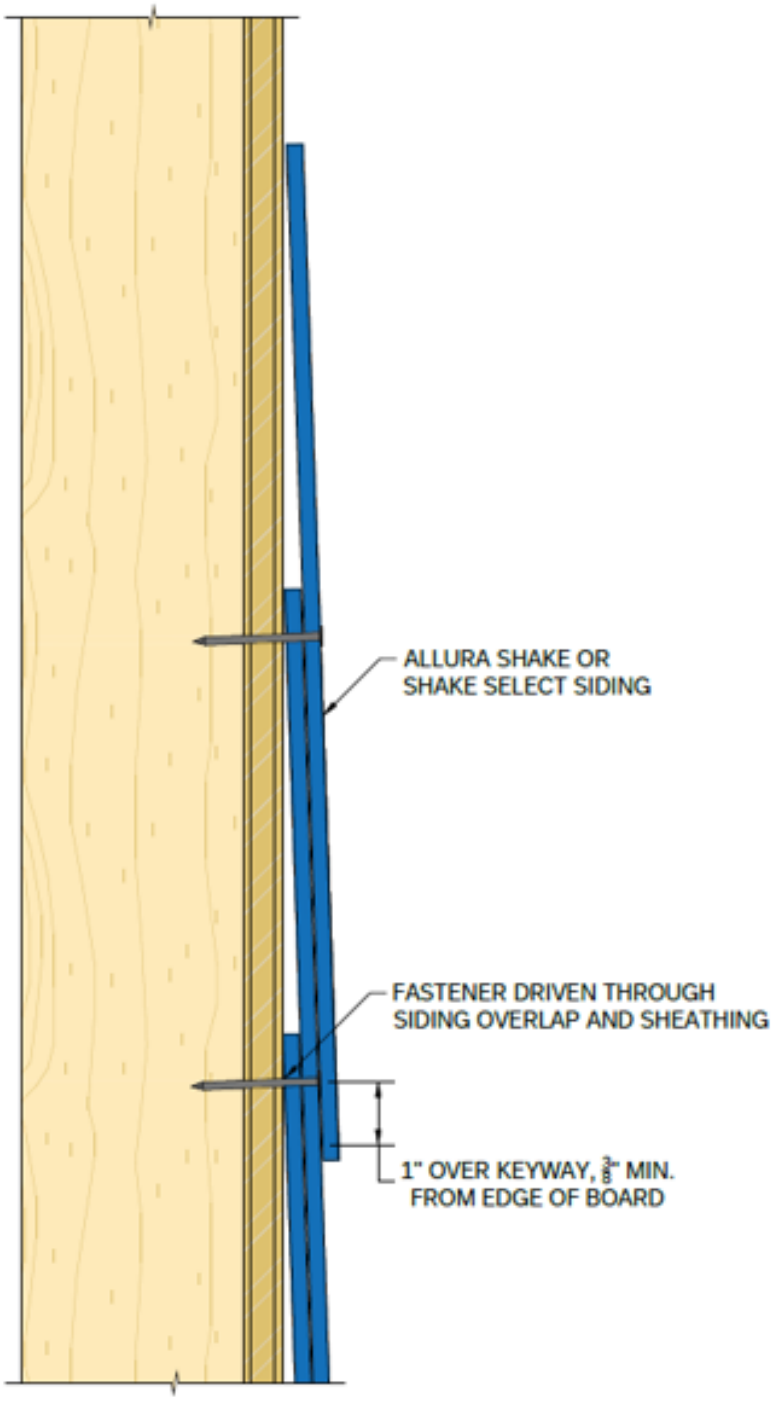

Figure 8 – Allura® and TerraPlank™ Shake and Allura® Shake Select General Installation

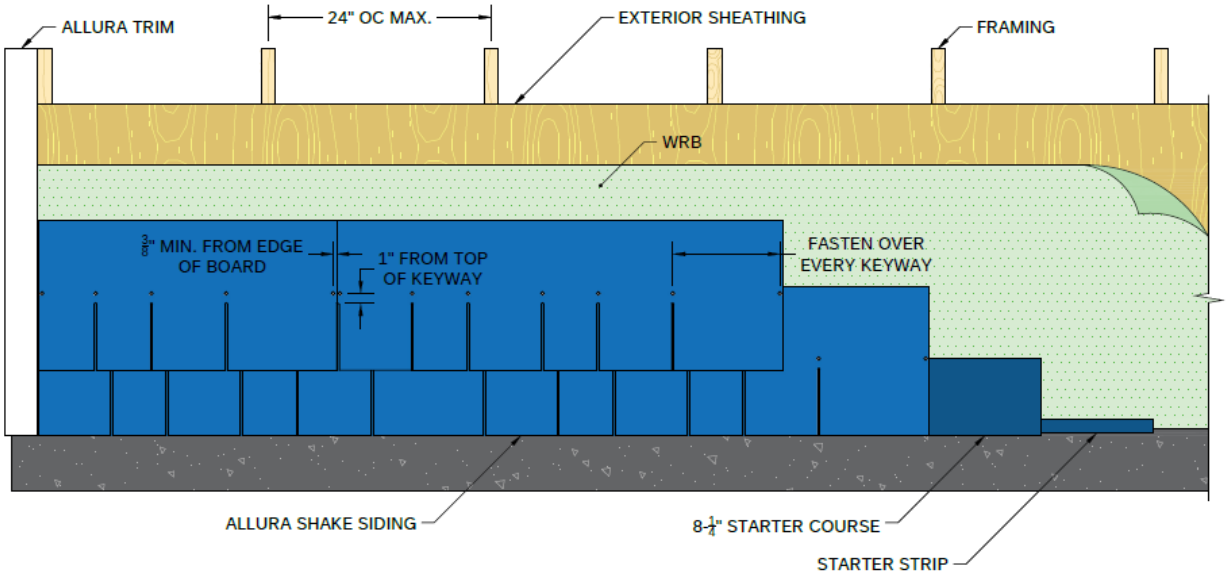

Figure 9 – Allura® and TerraPlank™ Shake Siding Blind Nail Fastening Details

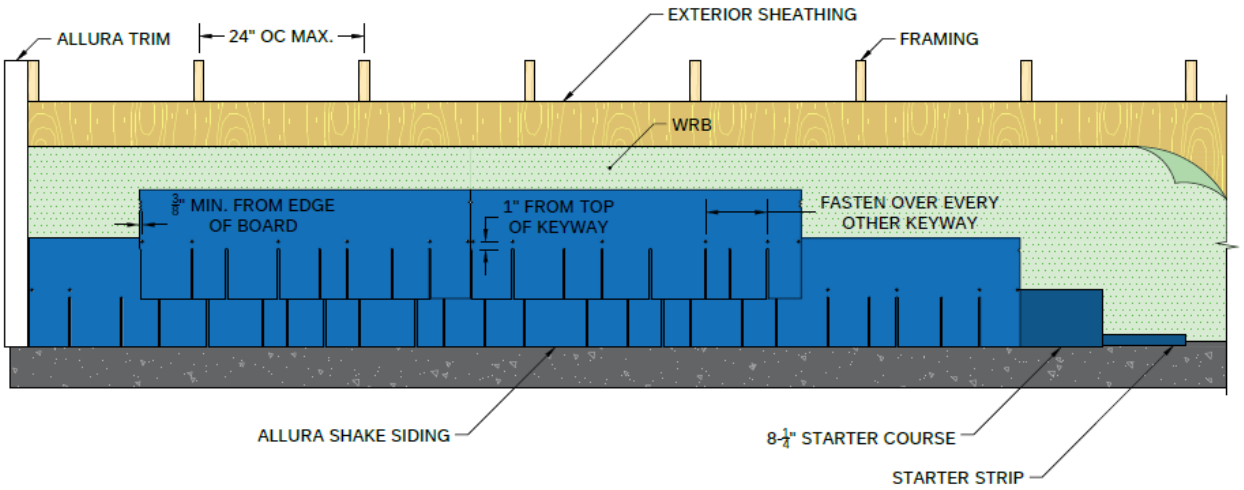

Figure 10 – Allura® Shake Select Siding Every Other Keyway Fastening Details

10.0 SUPPLEMENTAL CODES

10.1 2023 Florida Building Code and Florida Residential Code

Allura® and TerraPlank™ siding products as detailed in Sections 2.0 through 9.0 of this report comply with the 2023 FBC Section 1404.10 and 2023 FRC Section 703.10 *fiber-cement siding* conforming to ASTM C1186 as Type A Grade II fiber cement. The products comply for use in areas not defined as high-velocity hurricane zones (HVHZ). Installation is to be in accordance with the applicable building codes and this report.

10.2 2025 / 2022 California Building Code and California Residential Code

Allura® and TerraPlank™ siding products as detailed in Sections 2.0 through 9.0 of this report comply with the 2025 / 2022 CBC Section 1403.9 and 2025 / 2022 CRC Section 703.10 fiber-cement siding conforming to ASTM C1186 as Type A Grade II fiber cement. Installation is to be in accordance with the applicable building codes and this report.

10.3 2025 California Wildland-Urban Interface Code

Where used in areas identified by the state as a Fire Hazard Severity Zone or any Wildland-Urban Interface (WUI) designated by the enforcing agency, Allura® and TerraPlank™ siding products as detailed in Sections 2.0 through 9.0 of this report are approved for use in exterior design and construction in accordance with Section 503.2.1 of the 2025 CWUIC and as non-combustible material determined in accordance with section 504 of the 2025 CWUIC as outlined in this report.

10.4 2024 / 2021 International Wildland-Urban Interface Code

Allura® and TerraPlank™ siding products as detailed in Sections 2.0 through 9.0 of this report comply with the requirements of the 2024 / 2021 IWUIC Sections 503.2 *Noncombustible Material item*, 504.5 *Exterior Walls*, and 505.5 *Exterior Walls* when installed in accordance with this report. Installation is to comply with this report and requirements of the 2024 / 2021 IWUIC based on Ignition Class required.

10.5 2025 / 2022 California Green Building Standards Code (CALGreen), Title 24 Part 11

Allura® products with Spectrum® finish comply with 2025 / 2022 California Green Building Standards Code (CALGreen) Section A4.405.1 as prefinished building materials. Allura® fiber-cement products comply with 2022 CALGreen Section A4.406 as materials with enhanced durability and reduced maintenance.

10.6 2025 / 2020 / 2015 ICC 700 National Green Building Standard™ (ICC 700)

Allura® products with Spectrum® finish comply with 2025 / 2020 / 2015 ICC 700 Sections 601.7, and 11.601.7 as prefinished materials requiring no additional site-applied finishing.

11.0 ELIGIBILITY OF REPORT

QAI's Code Evaluation Report complies with the 2024 IBC Section 104.2.3.6.1 *Evaluation reports* and the 2021 / 2018 / 2015 IBC Section 104.11.1 *Research Reports*. Supporting data has been evaluated by QAI for compliance of the noted materials and assemblies to the applicable code by QAI, and *approved* source as detailed below.

The attached report has been reviewed by a QAI Registered Professional Engineer approved by the specific state Board of Professional Engineers noted on the specific P.E. seal(s).

Per section 1703 of the IBC, QAI is an independent third-party testing, inspection and certification agency accredited by the International Accreditation Service, Inc. (IAS) for this specific scope (see IAS PCA-118). QAI can confirm that based on its IAS accreditation it meets IBC Section 1703.1 on Independence, Section 1703.1.2 on Equipment and Section 1703.1 on Personnel.

This Evaluation report has been designed to meet the performance requirements of IBC Section 1703.4 and contains the required information to show the product, material or assembly meets the applicable code requirements.

The product is labeled per section IBC 1703 and subject to follow-up inspection per IBC 1703.6 using QAI IAS accredited ISO/IEC 17020 inspection program (see IAS AA-723).

For more information regarding QAI Laboratories, please visit www.qai.org.

The above is an example of the QAI registered Listing mark. The Listing mark may only be used by the Report Holder per the QAI service agreement on products defined in this report. The 'us' indicator in the 4 o'clock position indicates the product complies with the properties evaluated with limitations outlined in this report for use in the US market.

IAS ACCREDITED Product Certification Agency PCA-118

12.0 REFERENCED STANDARDS

ASTM E84 *Standard Test Method for Surface Burning Characteristics of Building Materials*.
ASTM E2768 *Standard Test Method for Extended Duration Surface Burning Characteristics of Building Materials*
ASTM C1186 *Standard Specification for Flat Fiber-Cement Sheets*.
ASTM E330 *Standard Test Method for Structural Performance of Exterior Windows, Doors, Skylights, and Curtain Walls by Uniform Static Air Pressure Difference*.
ASTM E119 *Standard Test Methods for Fire Tests of Building Construction and Materials*.
ASTM E136 *Standard Test Method for Assessing Combustibility of Materials Using a Vertical Tube Furnace at 750°C*.
ASCE/SEI 7 *Min. Design Loads and Associated Criteria for Buildings and Other Structures*